Revision:	Changes:	Date:
1.0	Initial Case, PCN: RVD002-107	2026.11.18

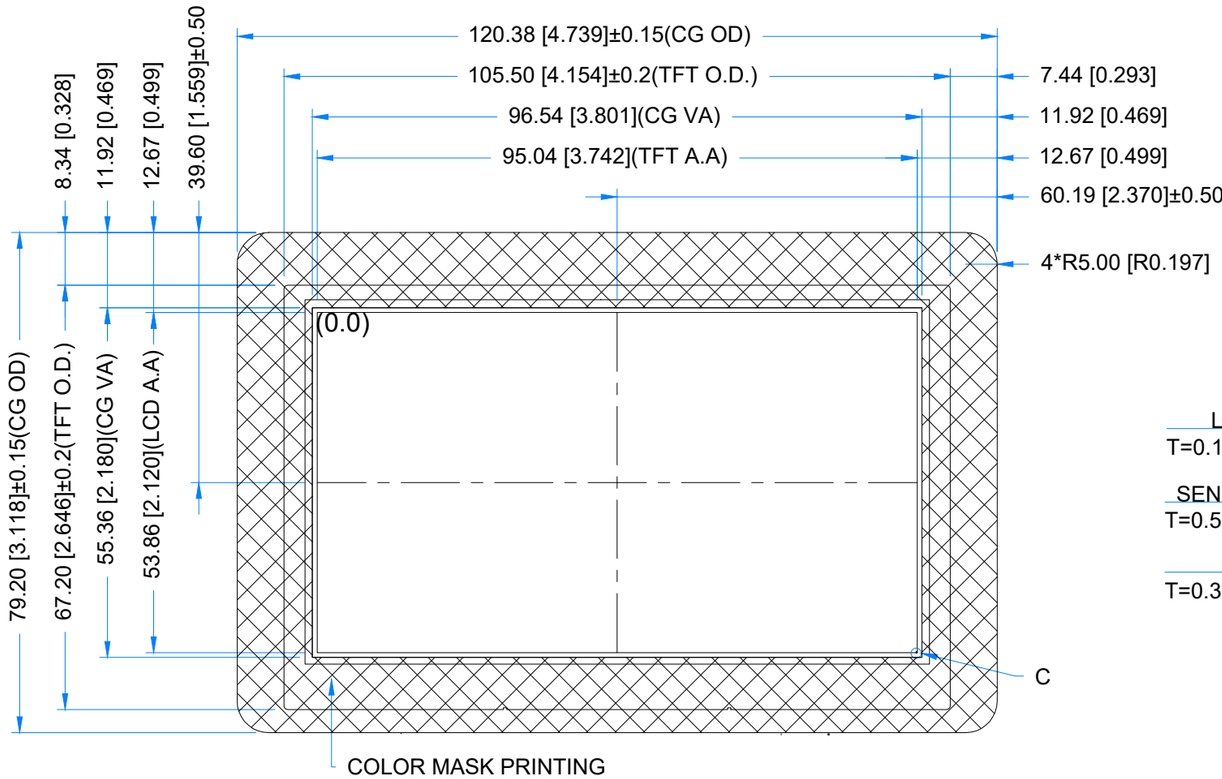

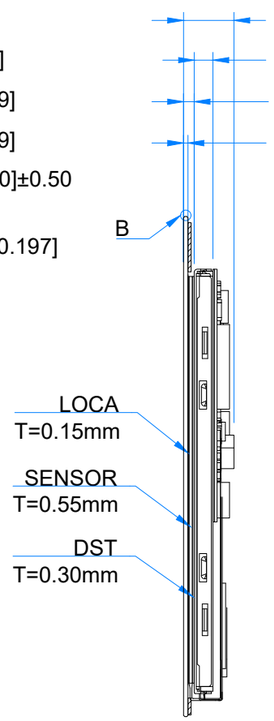

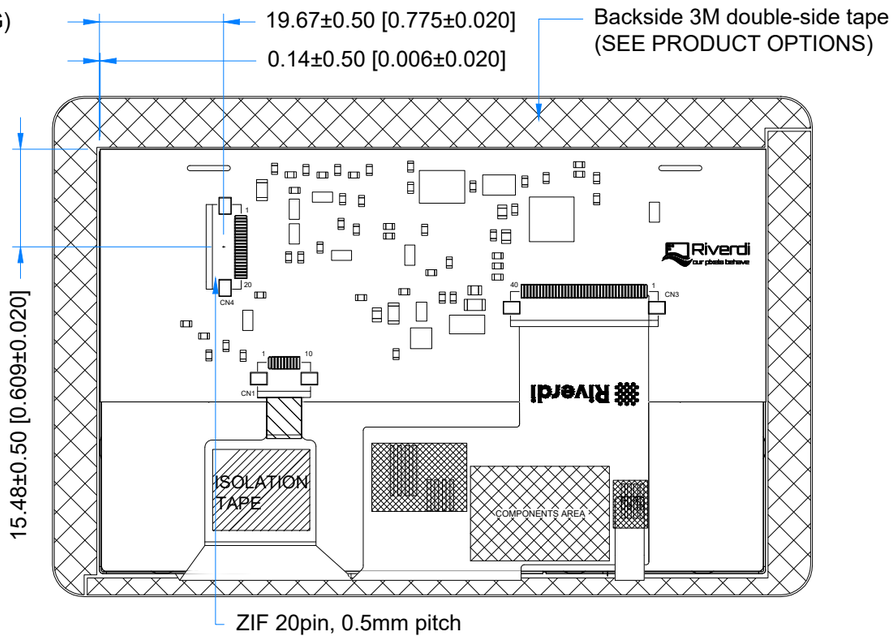

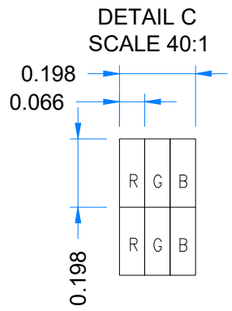

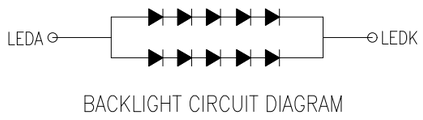

BACKLIGHT CIRCUIT DIAGRAM

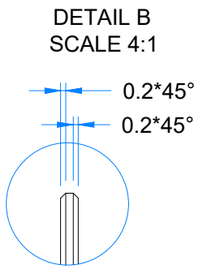

PRODUCT OPTIONS	
PN	DESCRIPTION
RVT43ULFNWC00	black cover glass, 0.2mm DST
RVT43ULFNWC01	black cover glass, 0.5 mm DST
RVT43ULFNWC02	black cover glass, no DST
RVT43ULFNWC03	white cover glass, 0.2mm DST
RVT43ULFNWC04	white cover glass, 0.5 mm DST
RVT43ULFNWC05	white cover glass, no DST

PINOUT ON THE 2ND PAGE

TFT NOTES:
1. DISPLAY TYPE: TRANSMISSIVE, NORMALLY WHITE
2. RESOLUTION: 480x272
3. VIEWING ANGLE: 12 O'CLOCK
4. INTERFACE: SPI/I2C
5. DRIVER IC ON THE BOARD: FT801
6. SUPPLY VOLTAGE FOR MODULE: 3.3V

TP NOTES:
1. TP STRUCTURE: G+G
2. CG THICKNESS: 0.70mm
3. DRIVER IC: FT5446U
4. SURFACE HARDNESS: 7H
5. INTERFACE: SPI VIA RIBUS AND FT801

GENERAL NOTES:
1. SURFACE LUMINANCE: 500cd/m^2
2. OPERATING TEMPERATURE: -20°C ~ 70°C
3. STORAGE TEMPERATURE: -30°C ~ 80°C
4. WITHOUT INDIVIDUAL TOLERANCE: ±0.3mm
5. RoHS COMPLIANT

PN: RVT43ULFNWC0x V6

SN:

Riverdi

DRAWN:	M.Stabinski	2026.11.18	1:0.97	
CHECKED:	M.Wierzbowski	2026.11.18	[mm]	
APPR:	M.Wierzbowski	2026.11.18	ISO A3	P. 1 of 1

CONNECTOR 4			
Pin No.	Desc.	Pin No.	Desc.
1	VDD	11	NC
2	GND	12	NC
3	SPI_SCLK/I2C_SCL	13	NC
4	MISO/I2C_SDA	14	NC
5	MOSI/I2C_SA0	15	NC
6	CS/I2C_SA1	16	NC
7	INT	17	BLVDD
8	PD	18	BLVDD
9	MODE	19	BLGND
10	AUDIO_OUT	20	BLGND